EXPLOSION-PROOF POINT TYPE FLAME DETECTOR "ALMAZ"

PASSPORT
APKI 412216.002 PS

TECHNOTRADE LTD

CONTENTS

1. INTRODUCTION

This passport is designed to acquaint with the device and the principle of the explosion-proof point type flame detector ALMAZ for hazardous areas, to the extent necessary for the operation and also contains information about the installation, maintenance, transportation and routine maintenance.

2. FUNCTION

2.1. Flame detector (hereinafter - FD) is designed to detect flame ignitions inside buildings and structures, accompanied by ultraviolet radiation (UV) in the wavelength range from 220 to 280 nm.

2.2. FD should be connected to the fire alarm system via two-wire circuit connections (FD sends a "Fire" signal by changing the level of current consumption) or four-circuit connection (FD sends "Fire" signal by unlocking or locking signal loop).

2.3. FD has explosion-proof casing that meets the requirements of Electrical Installation Regulations - EIR (Ch. 7.3) and other applicable regulations for the usage of electrical equipment located in hazardous areas. The degree of explosion protection - 1ExdIICT6/T5.

2.4. FD to be used in circumstances where, in the event of fire, there is a fast burning open flame.

2.5. FD does not respond to changes in temperature, humidity of the surrounding environment and the types of light (such as incandescent and fluorescent bulbs, daylight, etc.).

2.6. FD is not a source of any danger either for people or property, while in operation or in emergency situations.

2.7. The electric power feed of FD and transmission of discrete “Fire" output signal is provided over two-wire loop or four-wire loop of fire alarm.

2.8. FD is designed for round the clock continuous operation in automated systems of fire detection together with alarm control panels, receiving and controlling fire-safety devices and signal launchers that provide a power supply in a fire alarm loop (10 ÷ 30) V (e.g. Tiras, Varta panels, etc.).

2.9. FD is not a measurement device.

2.10. FD is a renewable flame detector with a remote return to its original state.

2.11. FD has flame-safe construction design.

2.12. FD is non-removable detector and is mountable in vertical and horizontal positions. FD can also be mounted together with a special rotary device that is used to guide the FD in the possible flame occurrence direction.

2.13. FD comes in dust-proof and splash-proof version. FD case provides protection degree IP64.

3. TECHNICAL SPECIFICATIONS

Sensitivity and inertia of operation:

3.1. The sensitivity of the FD meets the intensity of ultraviolet radiation caused by fire of normalized test fire source of methane gas burner (B1) and n-heptane flame (C1) under the DSTU EN54-10, mounted on the optical axis of the sensor of FD at a distance of 25 m, corresponding to class 1 according to DSTU EN54-10.

3.2. The sensitive element of the FD is in the center of the window, recessed relative to the surface of the window to a depth of 20 mm.

NOTE

For preassigned intensity of ultraviolet radiation from the test flame of normalized fires source in locations of FD sensor lighting, it is permitted to create an analogue flame sources of paraffin candle with diameter of 25 mm and height (3 - 4) cm, installed at a distance (4 ± 0,1) m from the FD sensor.

3.3. The inertia of the FD triggering in the registration normalized test source on p. FD 3.1 for no more than, s 3

3.4. The inertia of the FD triggering in the registration of ultraviolet radiation device check, no more than, s 5

Other specifications

3.5. FD power supply to be provided on two- or four-wire fire alarm cable, range of feeding DC voltage, V .....(10 - 30).

3.6. Current consumed FD in alarm mode, no more than, mA ..... 20^{+10}_{-2}

3.7. The voltage on FD in alarm mode at nominal current value, not less than, V 8

3.8. Output signal of FD triggering remains after exposure to ultraviolet radiation flame. Return of the FD into standby state is carried out by a power cut for at least, s 3

3.9. FD is not triggered in the short term periodic power failures of not more than, ms..100

3.10. The FD current consumption in standby mode with the supply voltage (10 ... 30) V, мA..... 0.18 to 0.25

3.11. Operating temperature range, ° C .... from - 40 to + 55

3.12. Maximum humidity at + 40 ° C, % 95

3.13. The degree of stiffness in resistance to electromagnetic interference .....third

3.14. FD acceptance angle, ° 90

3.15. Overall dimensions, no more than, mm .....Ø125 x 90 x 112

3.16. FD Weight, not more than, kg 1.25

3.17. Mean time between failures, hours 60000

3.18. The average lifetime of not less than, years 5

ATTENTION! Do not use the welding machine and halogen lamps in the action area of the enabled flame detector, because this can damage the sensor of detector.

4. PRODUCT SET CONTENTS

4.1. Contents of the FD product set is provided in Table 4.1.

Table 4.1.

Symbol	Name	Q-ty, pcs	Size, mm, not more	Weight, kg,	Note
APKI 412216.002	Fire flame point type detector FD	1	Ø125 x 90 x 112	1,25	Detector with base
DS-1212ZJ	Rotary Device (bracket) from 150 mm length	1	-	0,45	
PLG3G	Cap M32 x 1.5	1		0,125	
REV1B	Cable input hole 7-12 mm M20 x 1.5	1		0,07	
RE31G	M32 x 1.5 to M20 x 1.5 adapter	1		0,09	
APKI 412216.002 PS	Passport	1	-	-	-

5. THE DEVICE AND ITS OPERATION PRINCIPLE

5.1. FD is an automatic optic-electronic device that provides electrical and optical signaling of the emergence of a flame in a controlled room. When the flame emerges, FD sensor registers the appearance of ultraviolet radiation and converts it into a sequence of electrical pulses. Further, electronic circuit handles incoming information, and generates a signal of electric alarm "FIRE" in the form of the internal resistance of the FD reduction, normally open contact closure, or normally closed contacts opening. Optical signaling is performed by switching on the LED indicator of FD operation.

5.2. FD design

5.2.1. FD has the explosion-proof case. The degree of explosion protection - 1EhdIIST6 / T5. Case material - corrosion-resistant modified aluminum-silicon alloy GalSi13 of "Ksi13" brand, resistant to salt spray and other substances, including hydrogen sulfide vapor and hydrochloric acid, friction intrinsically safe. Finishing - antistatic polymer and epoxy coating, friction intrinsically safe and resistant to the working environment and ionizing radiation.

5.2.2. FD consists of (see. Appendix A, Fig. A.1, A.2, A3, A4, A.5):

- FD unit 1;
- Unified base (socket) 2.

5.2.3. FD unit (see. Appendix A, Fig. A.1, A.2, A3) is a single structure, with the three elements of printed circuit boards of electronic circuits interconnected with racks enclosed in the case 1. Lower board is the ground 2 of structure and connects to the body with screws 3. The front surface of the case has a viewing window 4. In the viewing window the sensor (UV detector) 5 and 6 LED operation indicator are visible. FD unit is attached to the base with screws 7.

5.2.4. Terminal block 8 is on the base of the structure, designed for connection of alarm cable to FD unit (see. Appendix A, Fig. A.3).

5.2.5 The base (see. Appendix A, Fig. A.4 and A.5) is designed for mounting the FD unit directly or with the rotary device to the carrier surface and for the fire alarm loop connection. The case 1 basis provided with mounting holes 2 for FD mounting, holes 3 for FD unit to the base mounting, holes 4 with a conical tube threaded M32, for the supply of signaling loop through various explosion-proof cable inputs. The cable input is delivered together with the FD and is attached to the connecting hole. Another connecting hole is closed with the explosive-proof plug. External 5 and internal 6 ground contacts are provided in the case of the base.

5.2.6. The top PCB of FD contains fire alarm system connectors.

5.3. Connecting the FD

5.3.1. Connecting the FD to fire alarm systems is done with a one of three ways (see Annex B):

- Two-wire connection scheme (FD status is determined by the current consumption), FD is powered with the same wires,
- Four-wire connection scheme to the normally closed contacts (electromagnetic relay opens the contact of control loop of the alarm control unit (PCU) in case of FD triggering), the FD is powered on separate wires,
- Four-wire connection scheme to the normally open contacts (electromagnetic relay closes the contacts of control loop of the alarm control unit (ACU) in case of the FD triggering), the FD is powered on separate wires.

6. SAFETY REQUIREMENTS

6.1. On the degree of protection against electric shock FD belongs to protection class I to ISO IEC 61140: 2005.
6.2. Safe operation of FD is ensured by the value of its power voltage less than 36V DC.
6.3. The construction, installation, inspection, maintenance and operation of the FD are allowed for the staff with the necessary skills, familiar with this passport and properly instructed on safety when working with voltage up to 1000 V.
6.4. FD scheme generates a stabilized voltage (325 ± 25) V with the equivalent internal source resistance of 470 kOhms.
6.5. The insulation resistance of FD circuits with voltage (325 ± 25) V in normal conditions is 20 MW.
6.6. Under the high voltage:
- Capacitor of extinguishing gas discharge circuit;
- UV detector.
6.7. All the work under removed FD case should meet the following precautions:
- Every time the FD is switched on with the case removed from unit body, do not touch points of schemes that are under high voltage.

7. INSTALLATION AND MOUNTING

7.1. Providing explosion protection during the installation.
7.1.1. The installation process of the FD in hazardous areas should be guided by:
- "Rules for Electrical Installation" (REI);
- "Electrical installations in hazardous areas operating and safety rules." Chapter 33.2;
7.1.2. Before the installation, the visual inspection of the FD is necessary. Visible mechanical damage (cracks, chips, dents) are not allowed.
7.1.3. During the installation of the FD please provide a reliable connection between the base and FD unit and reliable sealing of cable loop systems. All the screws, bushings, adapters, plugs should be tightened.
7.1.4. During the installation it is necessary to provide external grounding of the case (see. Appendix A, Fig. A.4, A.5, pos. 5,6).

7.2. Preparation for installation.
7.2.1. The design, placement and operation of the FD should be guided by the recommendations of Annexes C, D and E of the passport.
7.2.2. After receipt of the FD prepare the workplace, open the package and check the completeness according to the passport. If the FD were under conditions of negative temperatures prior to disclosure, please keep it in the room conditions for at least 4 hours.
7.2.3. If necessary, clean the viewing window of FD with cloth dipped in industrial alcohol.
7.3. FD functional test. Must be held outside the hazardous area!
7.3.1. Remove the FD off the base (socket). To do this, unscrew the screws 7 (see. APPENDIX A).
7.3.2. Connect the FD to DC power supply with an output voltage (10 ... 30) V and with load current at least 50 mA. The contact "+" FD plug positive contact of power supply, and the contact "-" - negative.
7.3.3. Switch on the power supply and check for at least 5 minutes if FD is not auto-triggered.
7.3.4. Light a paraffin candle of 25 mm diameter or portable gas lighter with a flame height (3 - 4) cm, hold it at a distance of no more than 4 meters from the FD sensor and simultaneously activate the stopwatch. Halt the stopwatch at the moment of FD triggering. Test the inertia (response time) of FD, which must be no more than 5s, with the stopwatch.

7.4. Installation of the FD.
7.4.1. FD should be mounted on the walls and under floors or ceilings of premises under control. Mounting of the FD on the ceiling is less desirable option, because of the fire at the stage of decay to the appearance of the flame to the ceiling can form a significant concentration of smoke particles, which causes further weakening of UV radiation information. In order to avoid UV weakening FD must be placed at a distance of at least 1 m from the ceiling, tilted to the optical axis.
7.4.2. Do not install FD in areas where evolution of gases, vapors and aerosols possible causing corrosion, and in places with open sources of ultraviolet radiation (e.g., electric welding, gas cutting, etc.).
7.4.3. FD is connected to the fire alarm consoles using two- or four-wire loop or through cable input of unarmored cable of diameter 7 - 12 mm. The use of either smaller (4 mm) or larger (27 mm) diameter of unarmored cable is possible. The use of FD with cable bushings for unarmored cable in hoses, pipelines, metal hoses and armored cables of the same diameter is possible.
7.4.4. Examples of wiring the FD to alarms loop are presented in Appendices C, D and E.
7.4.5. FD is mounted in position using the base to which he is dressed and fixed with screws. The base is mounted to the bearing surface, either directly or by means of a rotary device (bracket). FD must be securely fixed on site.
7.4.6. To connect the alarm loop, pull the cable through FD cable input, connect the cable according to the wiring scheme to the terminal block 8 (see Appendix A), and ensure tight wringing of wires in the terminal block.
7.4.7. Insert FD into the base and secure with screws. Tighten the screws. Tightening torque of M6 screws is 3.5 Nm. Provide a reliable seal of the cable by tightening of threaded cable entry. Pull all of the other threads of FD case.
To ensure the casing the FD is waterproof, you must carefully handle all its openings with neutral (does not cause corrosion) water-resistant sealant. Outdoors FD should be mounted under cover (for precipitation protection).
7.4.8. When FD is mounted on the properly installed base, position it in the direction of a possible place of fire. To determine the area covered use the data presented in Appendix F.
7.4.9. After the installation of fire alarm system is complete check its performance according to the passport for alarm control unit and this FD. Provide actuation of FD using simulators of flame or other device acceptable for use in hazardous area.
7.4.10. During the repair works in areas with installed FD, it should be provided with protection from mechanical damage and contact with building materials (whitewash, paint, cement dust, etc.).

8. TECHNICAL MAINTENANCE

8.1. Providing explosion-proof operation.
8.1.1. Only staff, studied the present passport, and having passed the test "Electric machines in hazardous areas operating and safety rules", are allowed to operation.
8.1.2. Checking and maintenance of the FD should be carried out according to the "Rules for Electrical Installation" (REI) (Ch. 7.3) and other existing regulations for the use of electrical equipment located in hazardous areas.
8.1.3. FD examinations should be carried out in accordance with the technical regulations.
8.1.4. On examination the following check should be done:
- The integrity of the case;
- The state of fasteners (all fittings should be tightened);
- The state of seals;
- The state of grounding.

8.2. Technical maintenance
8.2.1. The maintenance for the fire alarm systems should be done regularly, at least once a month, checking the FD operation. Failure to comply with this requirement manufacturer is not responsible for the operation.
8.2.2. During the maintenance of fire alarm system regularly, at least once a month, clean the glass surface of the aperture element of FD from dust and wipe it with a cloth moistened with alcohol on the basis of technical alcohol 3 g and 0.04 m2 rags 10 FD. Then check the FD operation in the fire alarm system in the following sequence:
- Switch the receiver into control mode according to the Passport;
- Light a paraffin candle Ø 25 mm and the flame height of (3 ÷ 4) cm;
- Hold a candle to the sensor at a distance of (0,5 ± 0,01) m from the audited FD;
- Check the triggering of the FD by the switching of its LED with not more than 5 seconds after exposing it to ultraviolet radiation of calibration device and after the input of "Fire" signal by the receiver;
- Extinguish a candle and switch the FD into the standby mode. The FD test is completed.

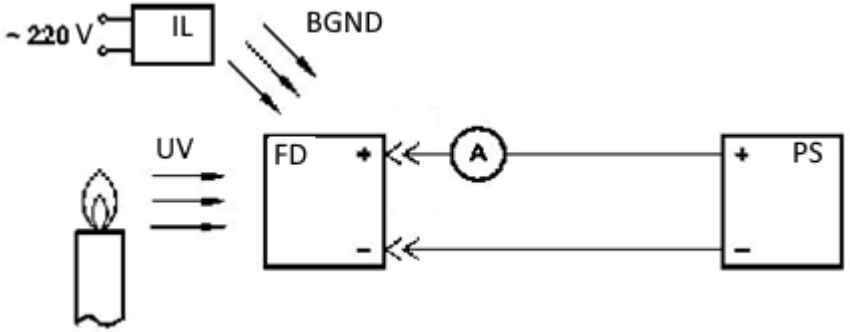

Fig. 8.1.

FD - flame detector;
PS - Power Supply DC 12V with a current load of at least 50 mA;
A - ammeter for direct current of up to 50 mA measurement;
IL - incandescent lamp 100 W x 220;
"+" and "-" FD contacts;
UV - ultraviolet radiation, which is emitted by candle flame;
BGND - background illumination, created by an incandescent lamp.

8.3. Sensitivity, inertia and electrical parameters testing of the FD. MUST be taken out of the hazardous area!
8.3.1. For the testing assemble the circuit setup shown at Fig. 8.1. Switch on the power supply and submit a constant voltage (10 ... 30) V to the FD. Check the absence of FD auto-triggering.
8.3.2. Close the FD censor with opaque object and check the consumable current of FD in standby mode with the ammeter A, which should be less than 0.25 mA
8.3.3. Set up the paraffin candle Ø 25 mm at the distance of (4 ± 0,1) m from the FD sensor.
8.3.4 Switch the measurement limit of ammeter A for measuring current of up to 50 mA.
8.3.5 Open the FD sensor while starting the stopwatch. At the moment of the FD LED triggering stop the stopwatch. Determine the inertia (timing) by the stopwatch, which should be no more than 5 seconds.
8.3.6. By voltmeters V determine the voltage supplied to the FD in worn condition, which should not be more than 8 V.
8.3.7. Determine the current consumed by the FD in worn condition with the ammeter A, which should be 20 + 10.2 mA.
8.3.8. Extinguish the candle. Then switch off the power supply after at least 3 seconds. Please re-enable PSU power supply and check the FD is not triggered.

8.3.9. Set the incandescent lamp 100 W x 220V at the distance (4 ± 0,1) m from the FD sensor and connect it to the network. Keep the FD the light of the lamp for 5 minutes, and check the FD is not triggered.
8.3.10. Turn off the power supply. Disconnect the FD from scheme. The test is finished.

8.4. In case of the FD break down please contact the manufacturer for warranty repair, for the post-warranty repair, contact the manufacturer or the specialized repair organizations.

9. POSSIBLE MALFUNCTIONS AND TROUBLESHOOTING

9.1. List of possible simple malfunctions and troubleshooting, see table 9.1.

Table. 9.1.

Failure description, outward manifestation and additional signs of malfunction	Possible cause	Solution
1. LED indicator is off in the triggered state.	Improper connection of alarm system loop. No contact between the wires loop and terminal block.	Check the connection schemes according to Annexes 2, 3, 4 and 5. Check contacts and tighten screws of terminal block.
2. On the alarm system console the signal "Loop fault" is detected.	Missing end resistor.	Check contacts and tighten screws of terminal block. Check the R_{OK} connection.
3. Reduced sensitivity of the FD.	The sensor is covered with dust.	Clear the FD with cloth, moisturized with technical alcohol (see p. 8.2)

10. HANDLING AND STORAGE

10.1. Transportation of the FD in the manufacturer's packaging can be carried by all types of ground and air transportation in closed vehicles. Value of climatic and mechanical stress during transportation must meet the DSTU 2890-94 requirements.
10.2. Location and mounting of the FD packages in vehicles should ensure their static position.
10.3. Guidelines of warning labels on the FD packaging should be strictly followed at all stages of transport.
10.4. The FD package must be stored indoor, providing protection from moisture, solar radiation, harmful fumes and mold.

11. CERTIFICATE OF ACCEPTANCE

Explosion-proof point type flame detector "Almaz" meets the technical conditions of TU 31.6-32251835-001: 2010 "Point Type Fire Flame Detector "Almaz" and found fit for use.

Stamp

12. MANUFACTURER WARRANTY

Manufacturer guarantees that the product meets the technical requirements in case of storage, installation and operation is provided according to the rules.

Warranty period - 24 months from the date of issue of the FD.

Manufacturer: LLC "TECHNOTRADE"
10 Priorska St., Office 1
Kyiv, 04114, Ukraine
Tel./Fax: (044) 502-46-55
Fax: +380 44 216-92-92
e-mail: mail@technotrade.ua
web: http://www.technotrade.ua

APPENDIX A

General view of the FD.

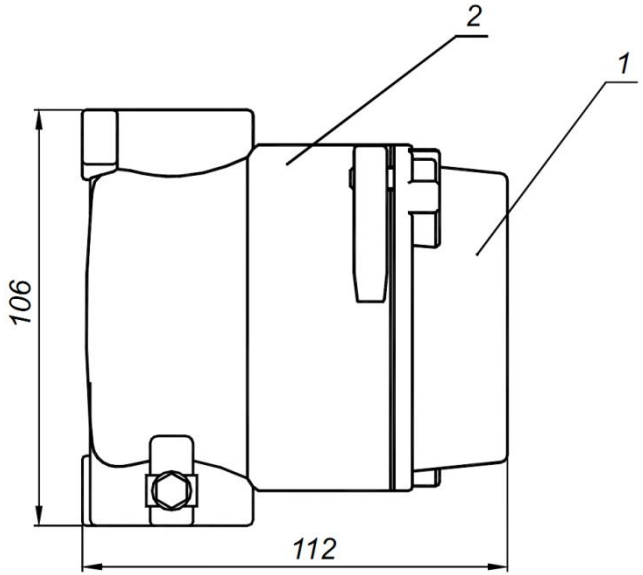

Figure A.1 General view of the FD

1 - FD Unit
2 - base (socket)

FD Unit. Top view.

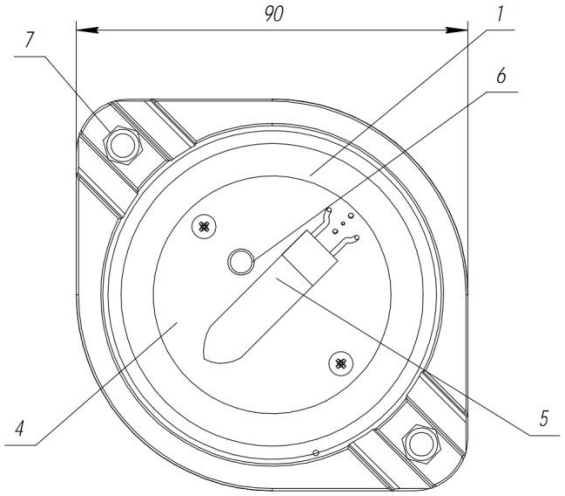

Figure A.2 FD Unit. Top view

FD Unit. View of the contacts side.

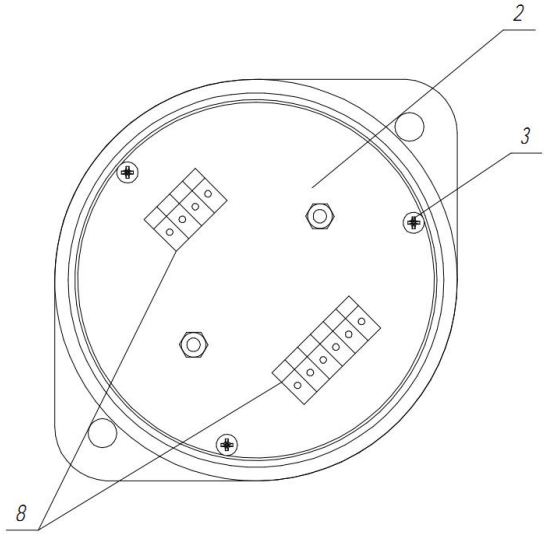

Figure A.3 FD Unit. View of the contacts side

1 - the case; 2 - base; 3 - base screw; 4 - viewing window; 5 - UV detector; 6 - LED indicator; 7 - screw for FD unit base mounting; 8 - terminal block.

FD Base.

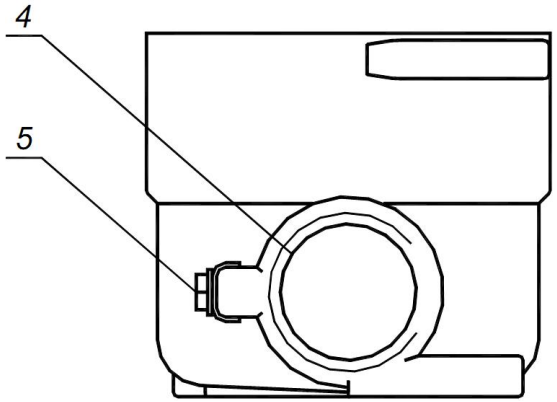

Figure A4 FD Base

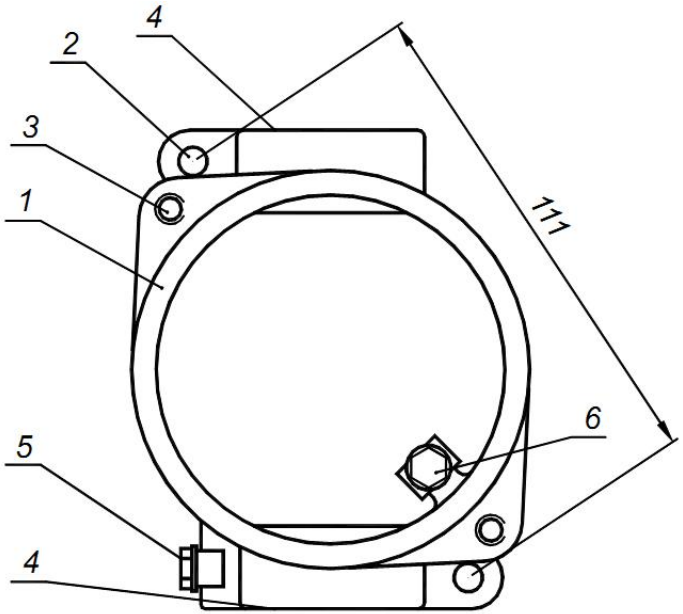

Figure A5 FD Base

1 - the case; 2 - mounting hole; 3 - FD Unit mounting hole; 4 - alarm system loop hole; 5 - ground screw (external ground); 6 - internal ground

APPENDIX B

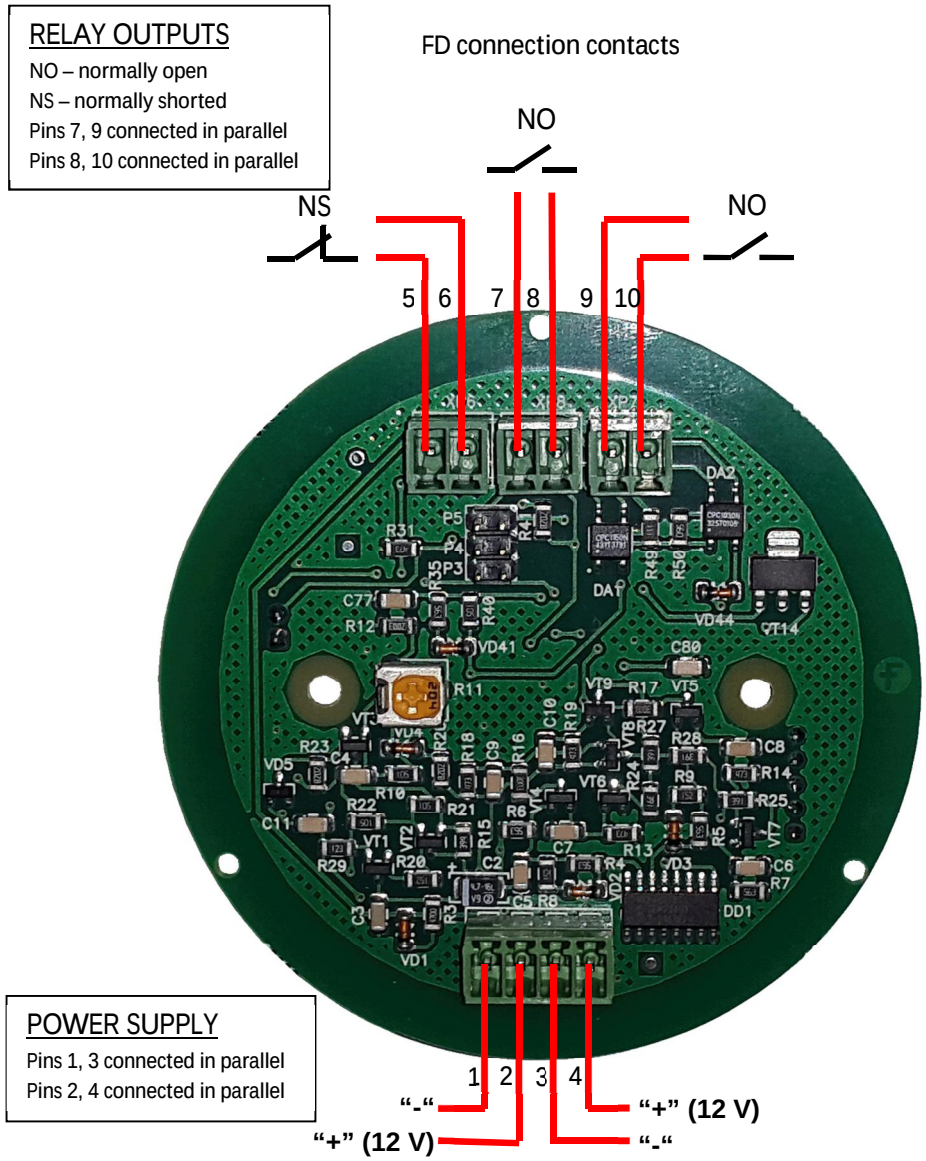

Figure B.1 Bottom PCB of FD Unit

APPENDIX C

Example circuit connection of FD "Almaz" to
two-wire fire alarm system

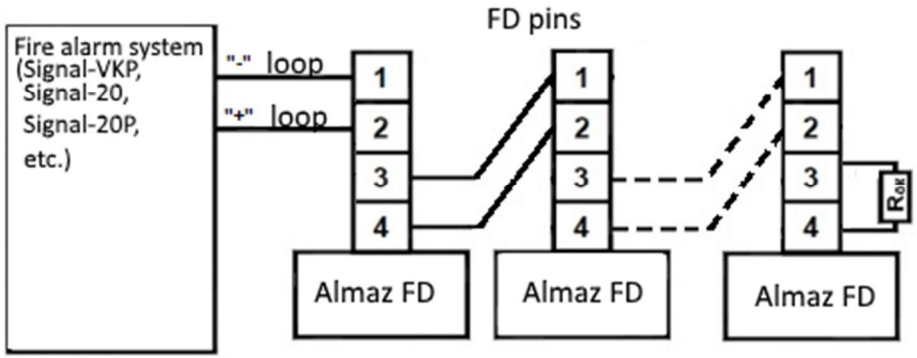

Figure C.1

NOTES:

1. FD base pin assignment:
pin 1 - "-" wire connection;
pin 2 - "+" wire connection;
pin 3 - "-" wire connection;
pin 4 - "+" wire connection;

2. R_{OK} - the end element of the alarm system loop, which type and rate are determined by the specific alarm control unit. Usually R_{OK} is installed into the last FD base.

APPENDIX D

Example of connection circuit of FD "Almaz" to the four-wire fire alarm system
(normally open contacts)

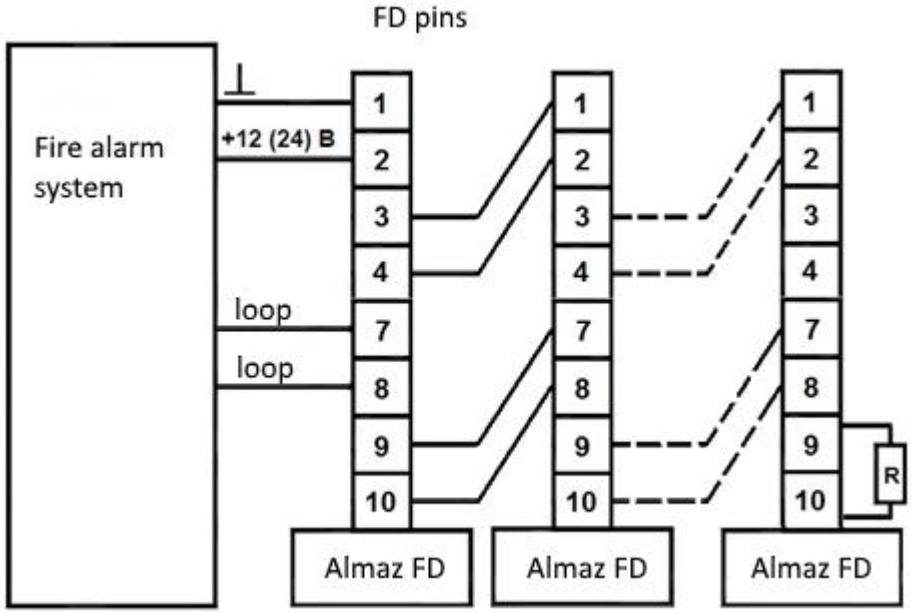

Figure D.1

NOTES:
1. FD base pin assignment:
pins 1, 3 - "-" wire connection;
pins 2, 4 - "+" wire connection;
pins 7, 8, 9, 10 - signal wire connection;
2. Pins 7 and 9 connected in parallel, pins 8 and 10 connected in parallel

ATTENTION! Specific connection circuits of FD "Diamond" to the four-wired alarm system, and the resistors R rates are given in the user manual of the control panel used.

ATTENTION! It is recommended to use the control panel with the grounded "-" of supply loop.

APPENDIX E

Example of connection circuit of FD "Almaz" to the four-wire fire alarm system (normally shorted contacts)

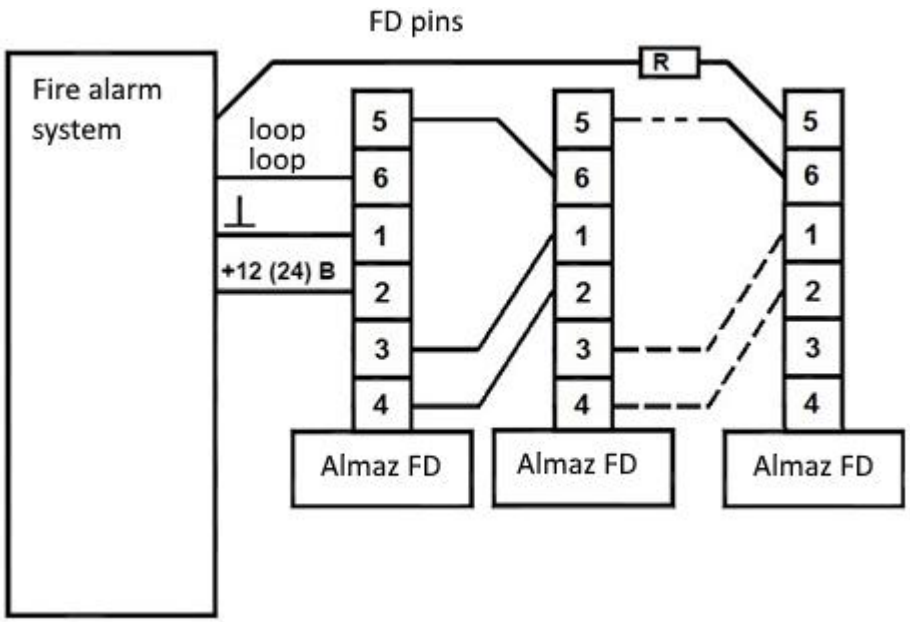

Figure E.1

NOTES:
1. FD base pin assignment:
pins 1, 3 - "-" wire connection;
pins 2, 4 - "+" wire connection;
pins 5, 6 - the signal loop connection;

ATTENTION! Specific connection circuits of FD "Diamond" to the four-wired alarm system, and the resistors R rates are given in the user manual of the control panel used.

ATTENTION! It is recommended to use the control panel with the grounded "-" of supply loop.

APPENDIX F

Definition of area, controlled by FD in guarded premises.

FD is installed on the walls and enclosing structures of buildings, as well as under ceilings or floors in premises controlled.

1. FD wall mounting.
In case of mounting the FD on the wall of guarded premises controlled area is as follows (see. Figure F.1):

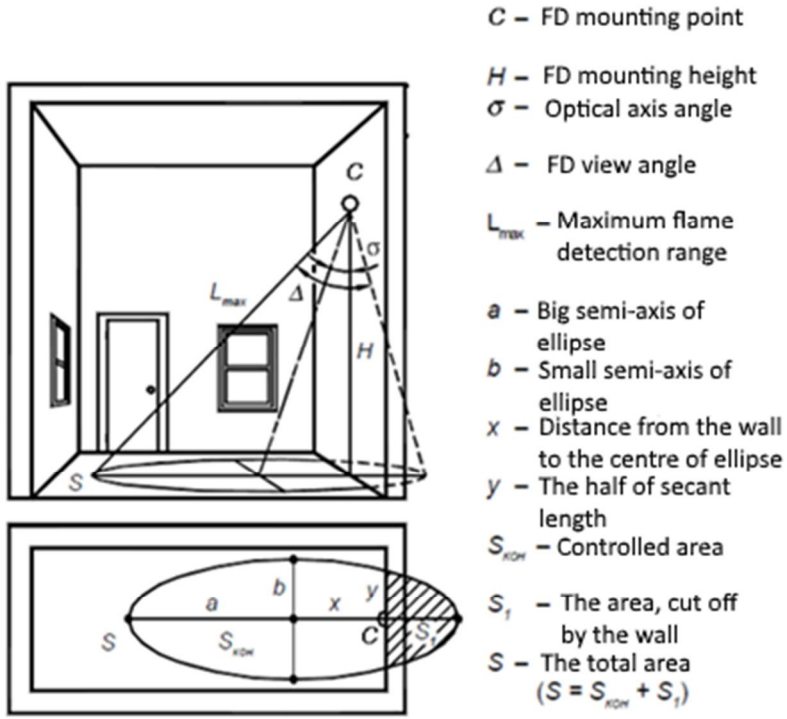

Figure F.1

In general, configuration of the controlled area looks like an ellipse, a square value is calculated using the formula (1.1):

$$S = \pi \cdot a \cdot b, \qquad (1.1)$$

where a, b - semi-axis of the ellipse.
Semi-axis a and b can be obtained from the canonical equation of the ellipse and trigonometric ratios sides and angles of triangles, which are cone section view of the FD.
At small angles of the optical axis of the FD you should be aware that some of the controlled area is cut off by a wall where the FD is mounted, thus the controlled area Scon = S - S1, where S1 - area, cut off by the wall.
Because the controlled premises usually have a rectangular shape, the quality of evaluative value of the area you can use the square inscribed in an ellipse rectangle:

$$S_P = 2 \cdot a \cdot b - S_{1P}, \quad , \qquad (1.2)$$

where S_{1P} – is the cut off the by wall area.
Scon and Sr values of the area for the FD "Almaz", depending on the height of FD mounting H, the maximum range of flame ignition source Lmax, the angle of inclination of the optical axis σ and the viewing angle of FD Δ, and the distance from the wall to the center of the ellipse x and the half the length of the cutting y are given in table F.1. Calculation and optimization of these values in the criteria of maximum protected area are performed using software mathematical provisions on PC.

1.1. FD "Almaz" **Δ** = 90 °, Lmax = 50 m.
FD "Almaz" is usually selected to mount at a sufficiently great height. The most optimal angle of the FD - σ = 30 °. When installation height is up to 7 m you can increase the angle by (5 ÷ 10) degrees. This will increase the protected area in 1,5 ÷ 2 times.

Table F.1 (σ = 30 °)

H, м	$S_{кон}$, м²	$S_п$, м²	L_{max}, м	a, м	b, м	x, м	y, м
3	77,7	50,9	11,6	6	4,2	5,2	2,1
3,5	105,7	69,3	13,5	7	5	6,1	2,5

Table F.1 continued

H, м	$S_{кон}$, м²	$S_п$, м²	L_{max}, м	a, м	b, м	x, м	y, м
4	138,1	90,5	15,5	8	5,7	6,9	2,8
4,5	174,7	114,6	17,4	9	6,4	7,8	3,2
5	215,7	141,4	19,3	10	7,1	8,7	3,5
5,5	261	171,1	21	11	7,8	9,5	3,9
6	310,7	203,6	23,2	12	8,5	10,4	4,2
6,5	364,6	239	25,1	13	9,2	11,3	4,6
7	422,8	277,2	27	14	9,9	12,1	5
7,5	485,4	318,2	29	15	10,6	13	5,3
8	552,3	362	30,9	16	11,3	13,9	5,7
8,5	623,5	408,7	32,8	17	12	14,7	6
9	698	458,2	34,8	18	12,7	15,6	6,4
9,5	778,9	510,5	36,7	19	13,4	16,5	6,7
10	863	565,7	38,6	20	14,1	17,3	7,1
11	1044	684,5	42,5	22	15,6	19,1	7,8
12	1243	814,6	46,4	24	17	20,8	8,5
13	1458	956	50,2	26	18,4	22,5	9,2
14	1691	1109	54,1	28	19,8	24,2	9,9
15	1942	1273	58	30	21,2	26	10,6
16	2209	1448	61,8	32	22,6	27,7	11,3
17	2494	1635	65,7	34	24	29,4	12
18	2796	1833	69,5	36	25,5	31,1	12,7
19	3115	2042	73,4	38	26,9	32,9	13,4
20	3452	2263	77,3	40	28,3	34,6	14,1

2. Mounting the FD on the ceiling.

In case of mounting the FD on the ceiling the configuration controlled area will look like a circle (see. Fig. F.2). The value of controlled area (circle) is calculated with the formula (2.1):

$$S_{CON} = \pi \cdot (L_{max}^2 - H^2), \qquad (2.1)$$

where $L_{max}^2 - H^2 = R^2$, R – the radius of circle.

S_{CON} area value depending on installation height of FD H, the maximum range of flame ignition source L_{max} and radius R are shown in Table F.2.

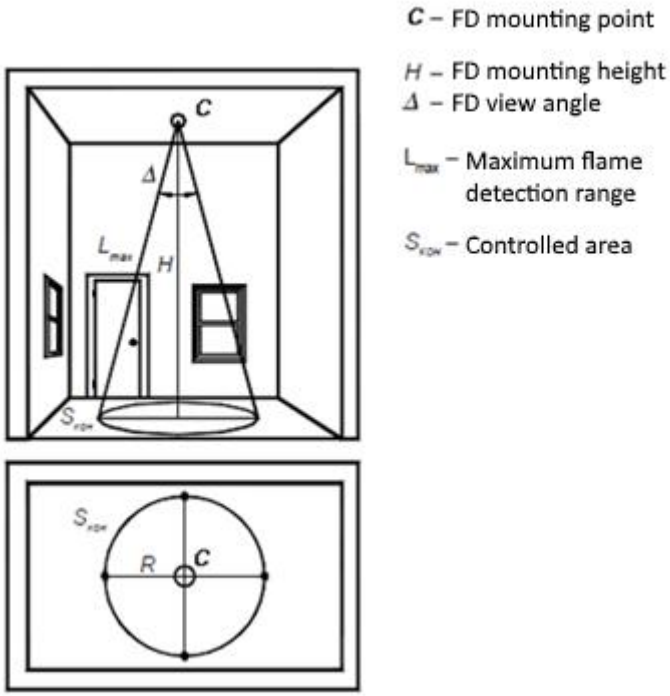

Figure F.2

1.1. FD "Almaz" Δ = 90°, L_{max} = 50 м.

Table F.2

H, м	$S_{кон}$, м²	L_{max}, м	R, м
3	28,3	4,2	3
3,5	38,5	5	3,5
4	50,3	5,7	4
4,5	63,6	6,4	4,5
5	78,5	7,1	5
5,5	95	7,8	5,5
6	113,1	8,5	6
6,5	132,7	9,2	6,5
7	153,9	9,9	7
7,5	176,7	10,6	7,5
8	201	11,3	8
8,5	227	12	8,5
9	254,5	12,7	9
9,5	283,5	13,4	9,5
10	314,2	14,1	10
11	380,1	15,6	11
12	452,4	17	12
13	530,9	18,4	13
14	615,8	19,8	14
15	706,9	21,2	15
16	804,2	22,6	16
17	907,9	24	17
18	1018	25,5	18
19	1134	26,9	19
20	1257	28,3	20

APPENDIX G

Certificate of compliance with DSTU EN 54-10: 2004

МІНІСТЕРСТВО ЕКОНОМІЧНОГО РОЗВИТКУ І ТОРГІВЛІ УКРАЇНИ
ДЕРЖАВНА СИСТЕМА СЕРТИФІКАЦІЇ УкрСЕПРО

Серія ВГ

СЕРТИФІКАТ ВІДПОВІДНОСТІ

Зареєстровано в Реєстрі за № UA1.016.0045532-15
Зарегистрирован в Реестре

Термін дії з 10 липня 2015 до 01 червня 2020
Срок действия с

Продукція / *Продукция*: Сповіщувач пожежний полум'я точковий 'АЛМАЗ' та сповіщувач пожежний полум'я точковий вибухозахищений 'АЛМАЗ' з маркуванням вибухозахисту 1ExdIICT6/T5

код УКТ ЗЕД, ТН ЗЕД: 26.30.50- 80.00
код ДКПП, ОКП

Відповідає вимогам / *Соответствует требованиям*: усім обов'язковим ДСТУ EN 54-10:2004

Виробник продукції / *Изготовитель продукции*: ТОВ 'ТЕХНОТРЕЙД', адреса: 04128, м. Київ, вул. Академіка Туполєва, 17, код ЄДРПОУ 32251835, адреса виробництва: 04114, м. Київ, вул. Полупанова, 10, офіс 1

Сертифікат видано / *Сертификат выдан*: ТОВ 'ТЕХНОТРЕЙД', адреса: 04128, м. Київ, вул. Академіка Туполєва, 17, код ЄДРПОУ 32251835

Додаткова інформація / *Дополнительная информация*: Сповіщувач пожежний полум'я точковий 'АЛМАЗ' та сповіщувач пожежний полум'я точковий вибухозахищений 'АЛМАЗ' з маркуванням вибухозахисту 1ExdIICT6/T5, що виробляються серійно з 10.07.2015 до 01.06.2020. Здійснюється технічний нагляд за виробництвом та стабільністю показників сертифікованої продукції 4 (чотири) рази протягом терміну дії сертифіката відповідності. Маркування продукції здійснюється національним знаком відповідності згідно з ДСТУ 2296-93, що наноситься на кожний сповіщувач

Сертифікат видано органом з сертифікації / *Сертификат выдан органом по сертификации*: Державний центр сертифікації ДСНС України, 01024, м. Київ, вул. Круглоуніверситетська, 20/1 (свідоцтво про уповноваження № UA.PN.016 від 09.12.2013), т.(044) 461-91-31, web-site:dcs.gov.ua

На підставі / *На основании*: Протоколи сертифікаційних випробувань від 08.07.2015 №№ 29/2015, 30/2015 Випробувального центру ТОВ 'Росток-ВЦ' (атестат акредитації від 02.06.2012 № 2Н416, дійсний до 01.06.2017). Сертифікат на систему управління якістю від 02.06.2015 № UA 2.016.09072-15 терміном дії до 01.06.2020 Державного центру сертифікації ДСНС України (свідоцтво про призначення від 20.11.2013 № UA.MQ.016). Дозвіл на застосування вибухозахищеного електрообладнання від 16.01.2014 № 142.14.32

№ 411390

Керівник органу з сертифікації / *Руководитель органа по сертификации*: Т.в.о. директора — підпис — В.О. Прищепа (ініціали, прізвище)

М.П.

Чинність сертифіката відповідності можна перевірити в Реєстрі системи УкрСЕПРО за тел. (044) 537-35-76

APPENDIX H

Certificate for quality management system ISO 9001-2009

Національний орган України з сертифікації

Орган з сертифікації
ДЕРЖАВНИЙ ЦЕНТР СЕРТИФІКАЦІЇ
ДСНС УКРАЇНИ

СЕРТИФІКАТ
НА СИСТЕМУ УПРАВЛІННЯ ЯКІСТЮ

Зареєстрований у Реєстрі Системи сертифікації УкрСЕПРО
02 червня 2015 р.
№ UA 2.016.09072-15
Дійсний до 01 червня 2020 р.

Цим сертифікатом посвідчується, що система управління якістю діє при

виробництві сповіщувачів пожежних полум'я

Коди ДКПП 26.30.50-80.00

Що здійснює ТОВ «Технотрейд»
адреса: 04128, м. Київ, вул. Академіка Туполєва, 17
Адреса виробництва: 04114, м. Київ, вул. Полупанова,10, офіс 1
код ЄДРПОУ 32251835

Відповідає вимогам ДСТУ ISO 9001:2009 «Системи управління якістю. Вимоги»
згідно з чинними в Україні нормативними документами

Сертифікат виданий Державним центром сертифікації ДСНС України (ОС Держцентр), 01024, м. Київ, вул. Круглоуніверситетська, 20/1, свідоцтво про призначення № UA.MQ.016 від 20.11.2013 р., на підставі Звіту за результатами перевірки та оцінки системи управління якістю № 298 від 27.05.2015 р.

Контроль відповідності сертифікованої системи управління якістю вимогам зазначеного стандарту здійснюється шляхом технічного нагляду, періодичність і процедури якого регламентуються програмою.

Т.в.о. директора Держцентру — В.О. Прищепа

APPENDIX I

The permit for operation (use) in hazardous areas

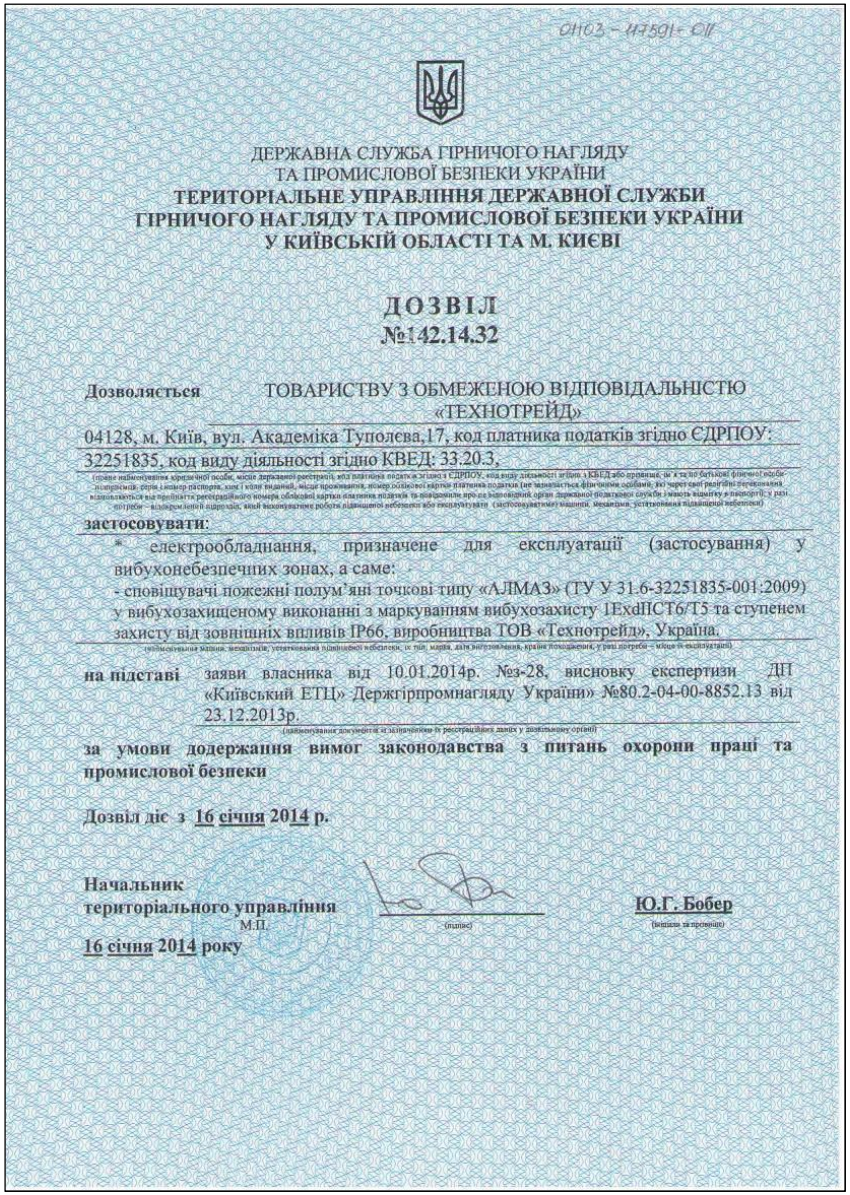

01103 – 47591 – 01

ДЕРЖАВНА СЛУЖБА ГІРНИЧОГО НАГЛЯДУ
ТА ПРОМИСЛОВОЇ БЕЗПЕКИ УКРАЇНИ
ТЕРИТОРІАЛЬНЕ УПРАВЛІННЯ ДЕРЖАВНОЇ СЛУЖБИ ГІРНИЧОГО НАГЛЯДУ ТА ПРОМИСЛОВОЇ БЕЗПЕКИ УКРАЇНИ У КИЇВСЬКІЙ ОБЛАСТІ ТА М. КИЄВІ

ДОЗВІЛ
№142.14.32

Дозволяється ТОВАРИСТВУ З ОБМЕЖЕНОЮ ВІДПОВІДАЛЬНІСТЮ «ТЕХНОТРЕЙД»

04128, м. Київ, вул. Академіка Туполєва,17, код платника податків згідно ЄДРПОУ: 32251835, код виду діяльності згідно КВЕД: 33.20.3,

(повне найменування юридичної особи, місце державної реєстрації, код платника податків згідно з ЄДРПОУ, код виду діяльності згідно з КВЕД або прізвище, ім'я та по батькові фізичної особи-підприємця, серія і номер паспорта, ким і коли виданий, місце проживання, номер особової картки платника податків (не запитається фізичними особами, які через свої релігійні переконання відмовляються від прийняття реєстраційного номера облікової картки платника податків та повідомили про це відповідний орган державної податкової служби і мають відмітку в паспорті), у разі потреби – власноручний підпис, який використовують при роботі підвищеної небезпеки або експлуатації (застосуванні) машин, механізмів, устаткування підвищеної небезпеки)

застосовувати:

* електрообладнання, призначене для експлуатації (застосування) у вибухонебезпечних зонах, а саме:
- сповіщувачі пожежні полум'яні точкові типу «АЛМАЗ» (ТУ У 31.6-32251835-001:2009) у вибухозахищеному виконанні з маркуванням вибухозахисту 1ExdIICT6/T5 та ступенем захисту від зовнішніх впливів IP66, виробництва ТОВ «Технотрейд», Україна.

(найменування машин, механізмів, устаткування підвищеної небезпеки, їх тип, марка, дата виготовлення, країна походження, у разі потреби – місце їх експлуатації)

на підставі заяви власника від 10.01.2014р. №з-28, висновку експертизи ДП «Київський ЕТЦ» Держгірпромнагляду України» №80.2-04-00-8852.13 від 23.12.2013р.

(найменування документів, містять відомості, що є підставою для видачі дозволу, їх номери та дати)

за умови додержання вимог законодавства з питань охорони праці та промислової безпеки

Дозвіл діє з 16 січня 2014 р.

Начальник
територіального управління (підпис) **Ю.Г. Бобер**
М.П. (ініціали та прізвище)
16 січня 2014 року